BCG-315

Grinder

power knot

About

The Power Knot BCG-315 grinder allows you to grind animal bones, fruit stones, plant stalks, fibrous materials, and other dense organic waste before disposal. This heavy-duty grinder is engineered for facilities that require high-capacity processing of organic materials prior to digestion, composting, or recycling.

The BCG-315 grinder features a reinforced frame that provides a stable, elevated platform for safe operation and efficient material flow.

With its powerful motor and double-shaft design, the BCG-315 ensures consistent particle size, improving the efficiency of waste handling processes including composting, aerobic digestion, and anaerobic digestion.



Applications

- Agriculture waste management
- Bone meal and fertilizer production
- Food waste recycling and processing
- Meat, poultry, and seafood rendering
- Pet food and animal feed manufacturing
- Livestock and slaughterhouse applications
- Pharmaceutical material processing
- Renewable energy and biofuel applications
- Wildlife and zoo feed preparation



Features

- Reinforced painted steel frame, can be disassembled for relocation
- Double-shaft shredder for hard and fibrous materials
- Low-speed, high-torque motor for efficient, quiet operation
- Heat-treated cutting knives (HRC 13) for extended durability
- K-Series gearbox for high reliability and long life
- Custom hopper designed for safe and ergonomic loading
- Wall-mounted control box with emergency stop for operator safety
- Motor can be reversed to clear any blockage

Bierman EQUIPMENT

Tim Bierman
President / CEO

4206 R Avenue
Larrabee, Iowa 51029

BiermanEquipment.com

(712) 261-0137

tim@biermanequipment.com

Benefits

- Grinds input materials into uniform particles for easy downstream processing
- Reduces waste volume, transportation, and disposal costs
- Enhances recycling by turning bone and plant waste into reusable byproducts
- Improves hygiene and safety by preventing decomposition and odor buildup
- Constructed for continuous, heavy-duty operation
- Reduces risk of pests and contamination from organic waste
- Simplifies maintenance and cleaning with accessible surfaces

Capacity

- 180 kg/h (400 lb/h)
- Largest bone: 400 mm (16”)

Output Material

15 mm to 35 mm (0.6” to 1.3”)

Power

5.5 kW

AC supply (order one type)

Without neutral (3L+PE)

208 V: 187 V to 230 V, 60 Hz

400 V: 360 V to 440 V, 50 Hz

Warranty

One year

Bierman EQUIPMENT BiermanEquipment.com | Call Tim today at (712) 261-0137

Control Box

Dimensions in mm ± 2 mm (inch ± 0.1 inch)

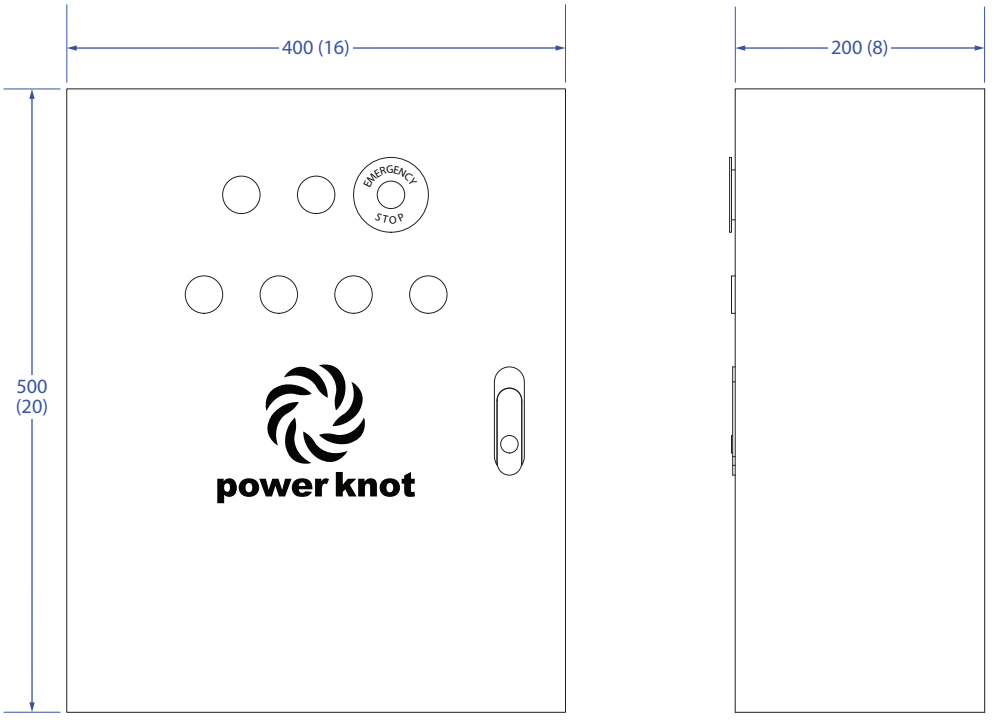

Front Side

BCG-315

Dimensions in mm ±2 mm

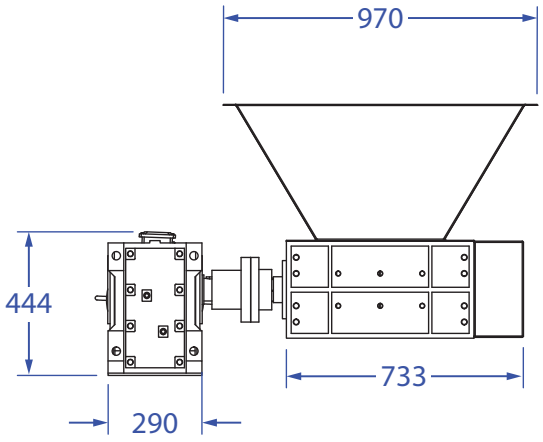

Side

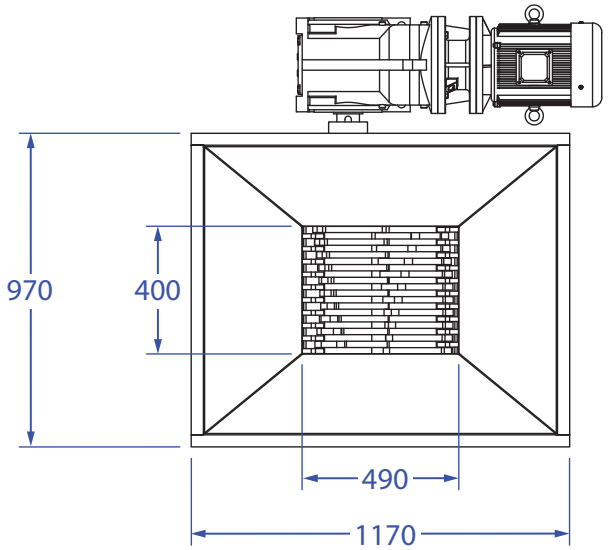

Top

Bierman EQUIPMENT BiermanEquipment.com | Call Tim today at (712) 261-0137

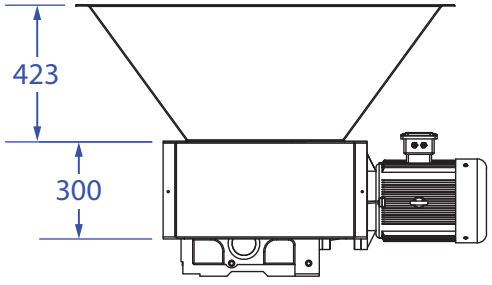

Front

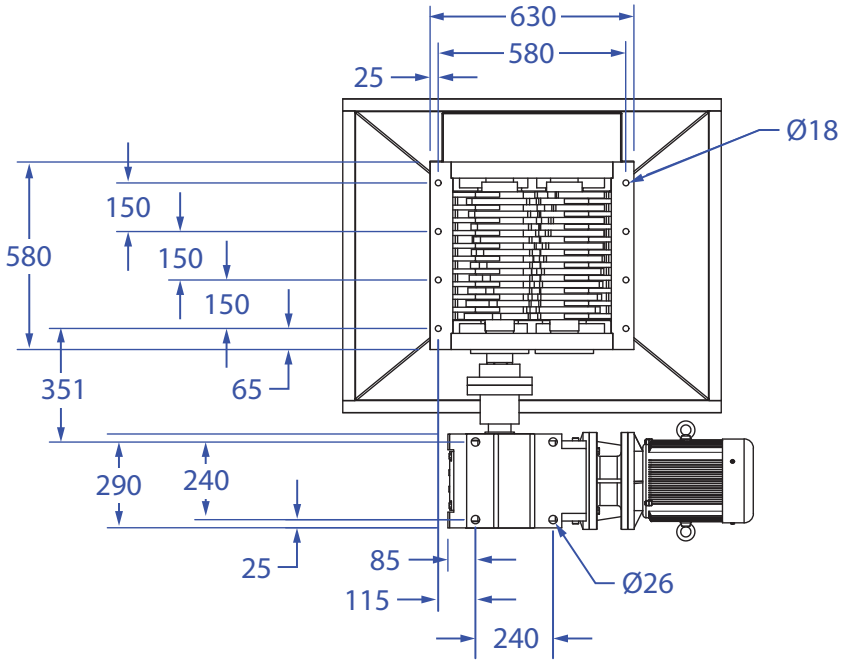

Bottom

BCG-315

Dimensions in inches ±0.1”

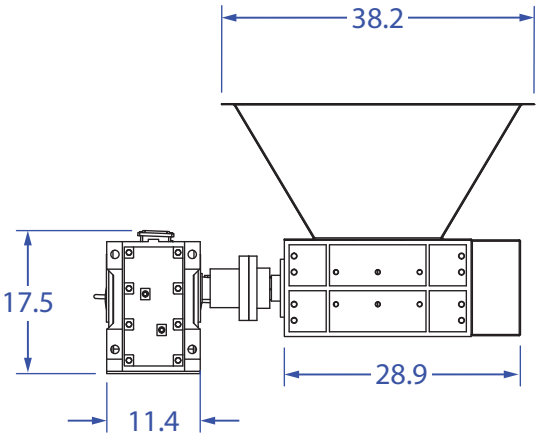

Side

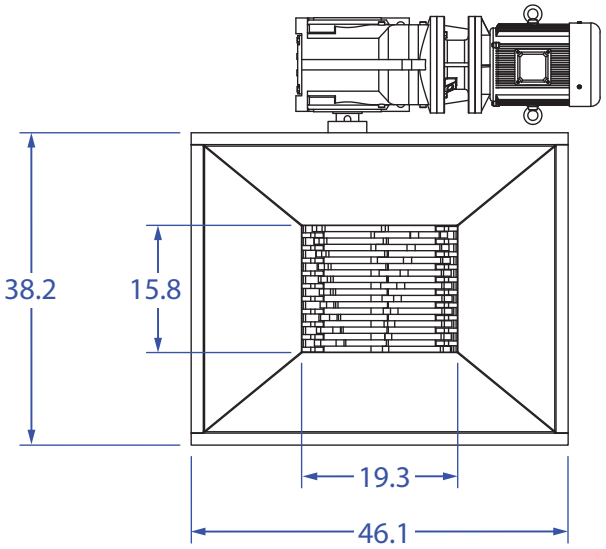

Top

Bierman EQUIPMENT BiermanEquipment.com | Call Tim today at (712) 261-0137

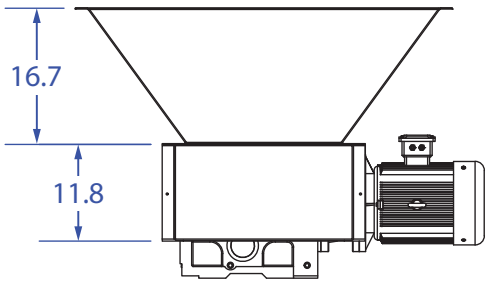

Front

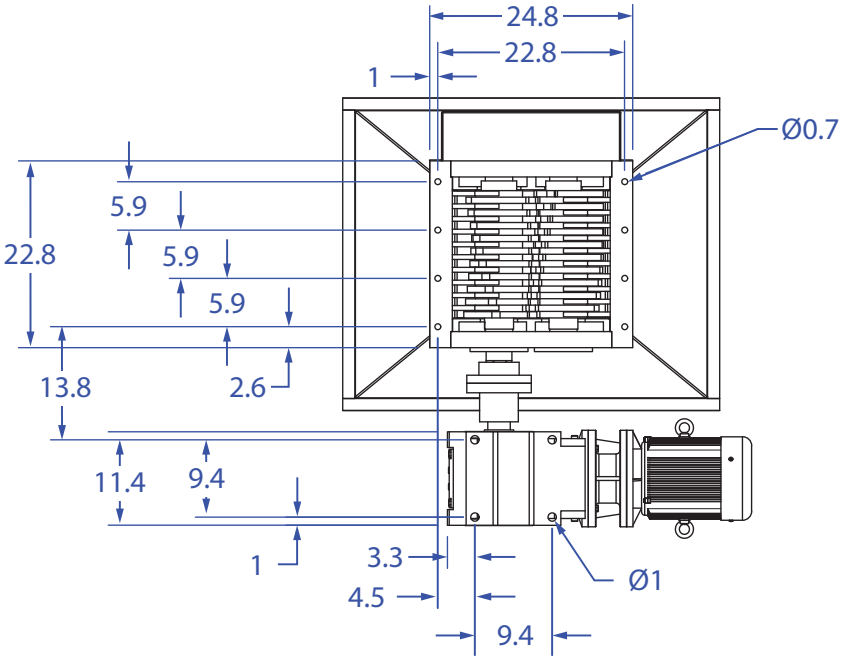

Bottom

BCG-315 Grinder Stand

Dimensions in mm ±2 mm

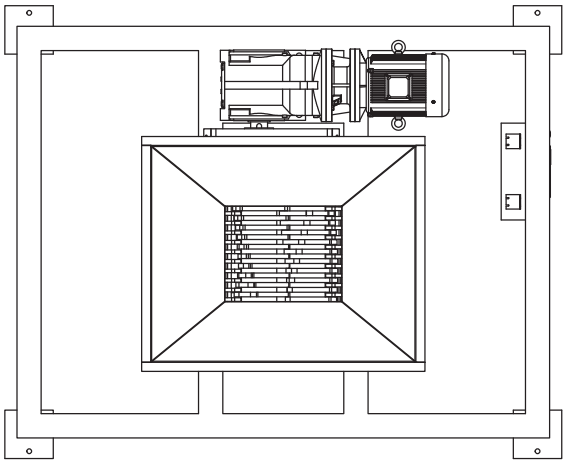

Top

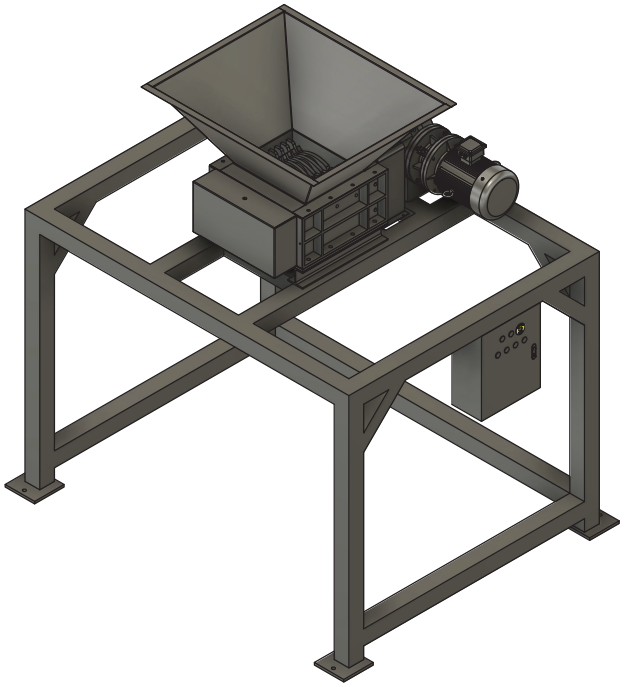

Bierman EQUIPMENT BiermanEquipment.com | Call Tim today at (712) 261-0137

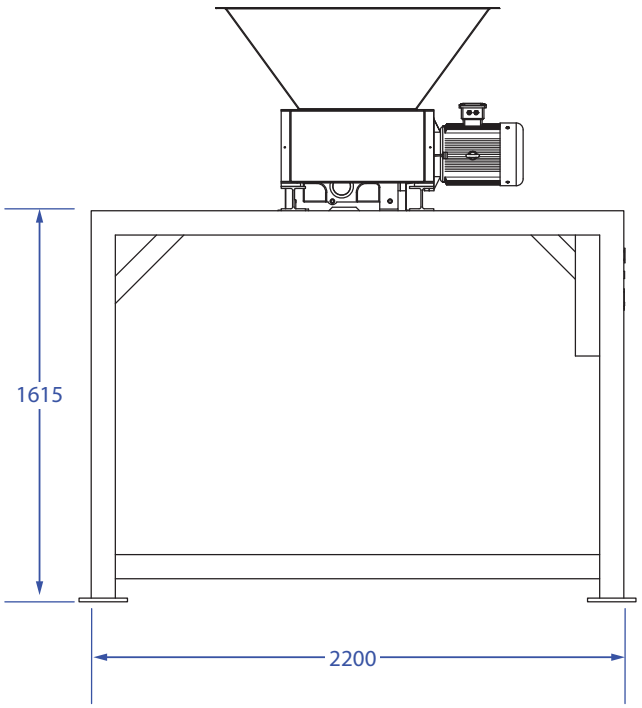

Front

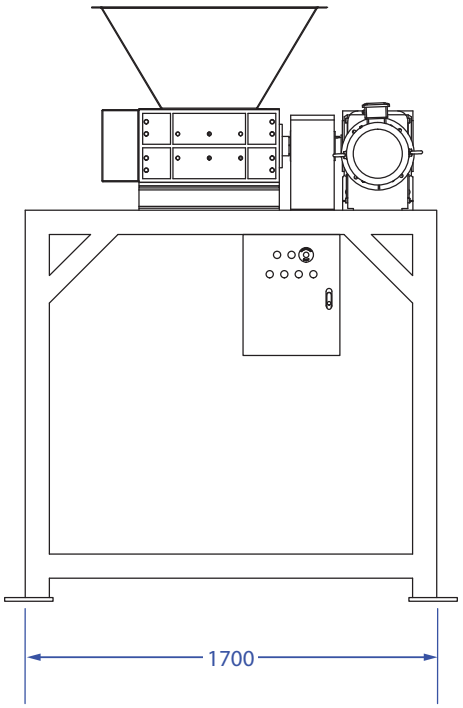

Side

BCG-315 Grinder Stand

Dimensions in inches ±0.1”

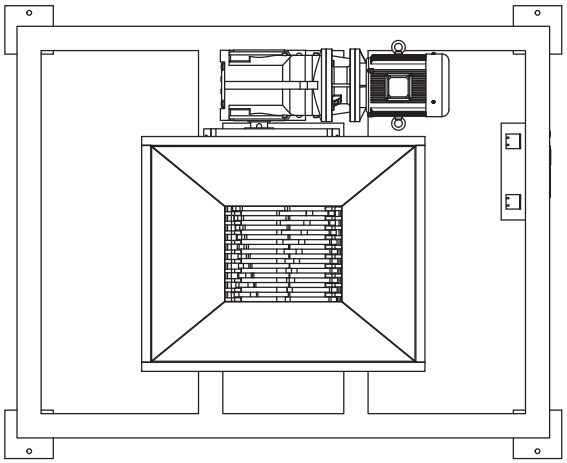

Top

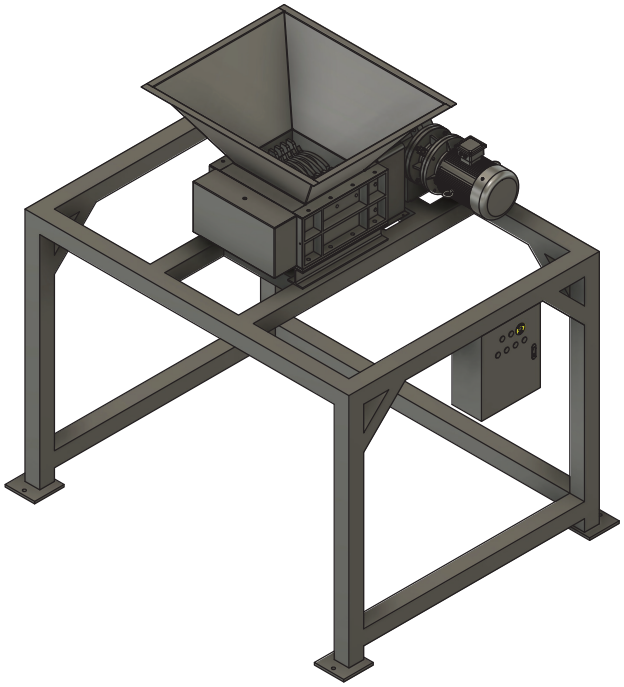

Bierman EQUIPMENT BiermanEquipment.com | Call Tim today at (712) 261-0137

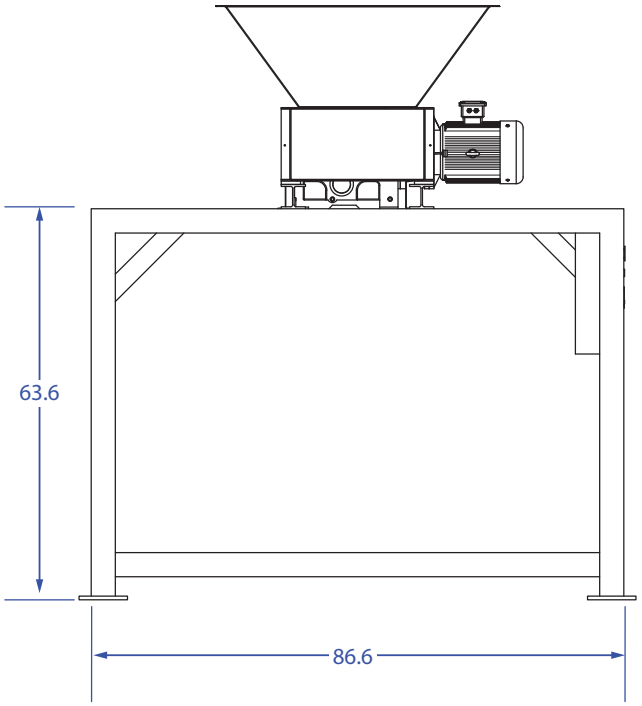

Front

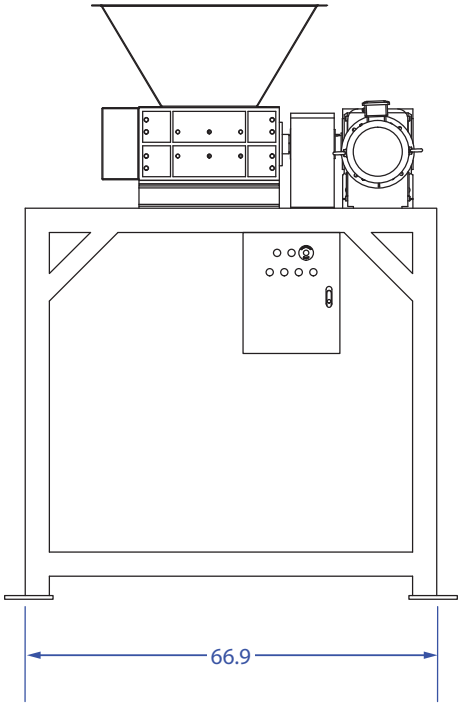

Side

Power Knot LLC | 47613 Warm Springs Blvd | Fremont, CA 94539 USA | +1-408-889-8433 | info@powerknot.com | www.powerknot.com

Power Knot, the Power Knot logo, the Power Knot mark, BCG and LFC are trademarks or registered trademarks of Power Knot LLC. All other trademarks used herein are the property of their respective owners. Copyright © 2023-2026 Power Knot LLC; all rights are reserved. Specifications are subject to change at any time without notice. Document 96-01341-05, revised 12 June 2026.